DIMENSIONS AND MOUNTING DETAILS

BMA630-HTD 630-RTD

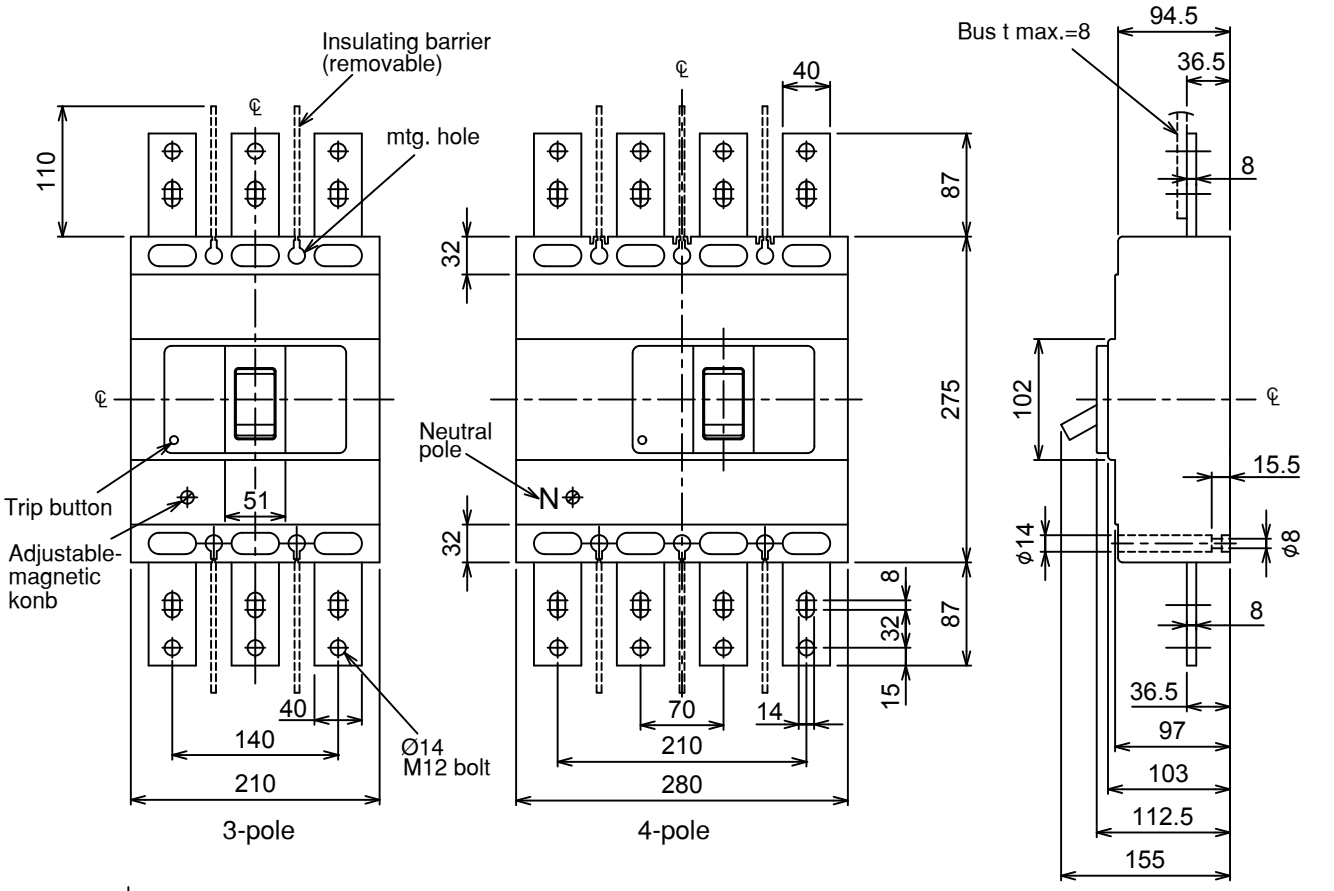

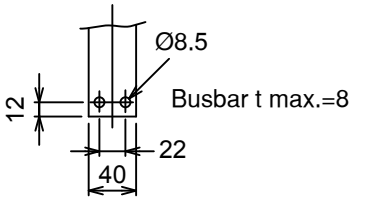

Bus drilling for
direct connection

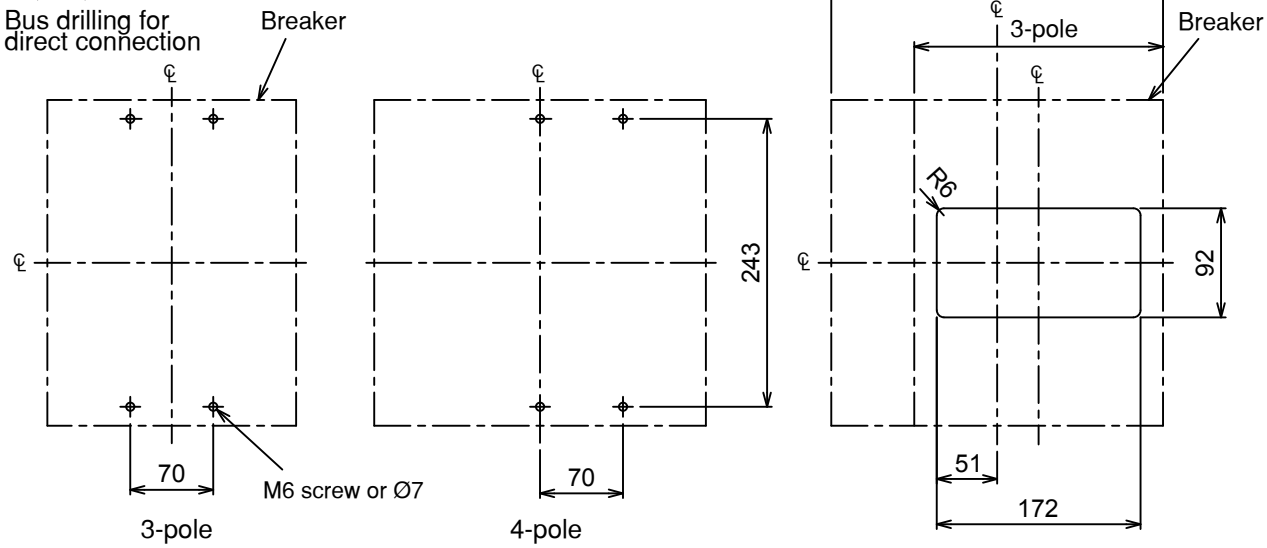

BM630-AF Dimension